REV	ECN	DATE	BY	CHANGE OR ADDITION

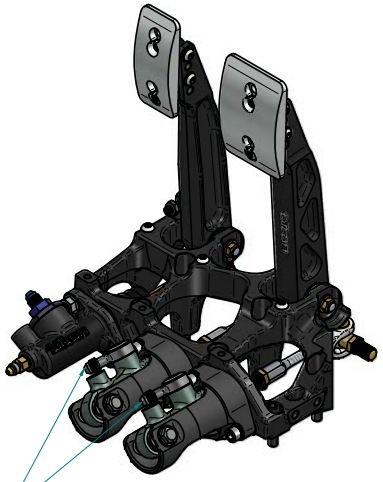

78-3400 LOW PROFILE AN4 BANJO BOLT FITTING FOR 78 SERIES INLET SOLD SEPARATELY

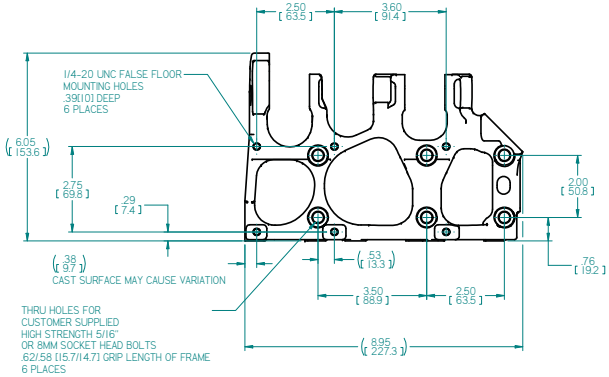

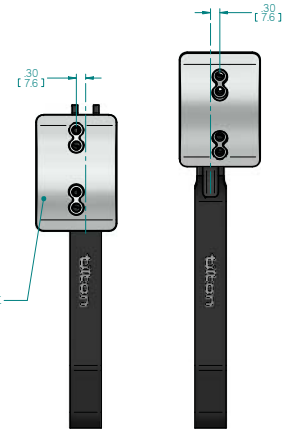

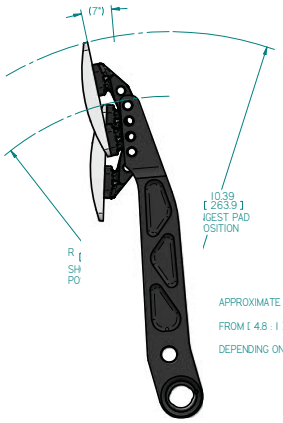

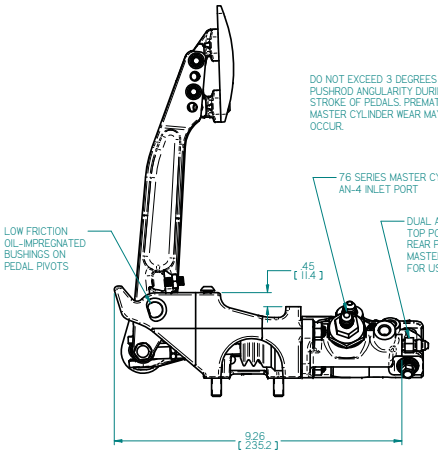

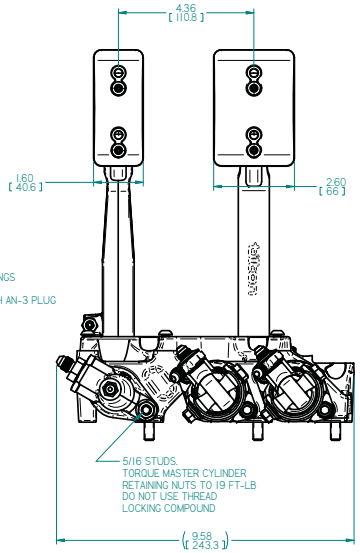

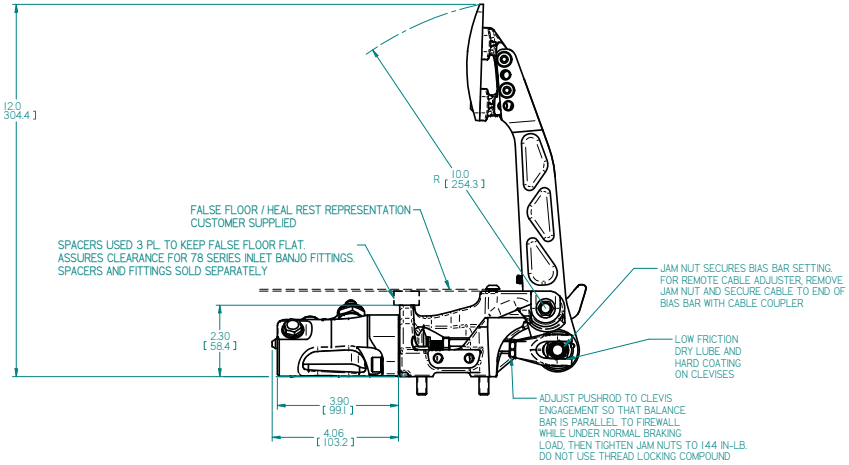

PEDAL ASSEMBLY IS COMPATIBLE WITH TILTON ENGINEERING
78 SERIES MASTER CYLINDERS AT BOTH BRAKE PEDAL LOCATIONS
76 SERIES MASTER CYLINDERS AT CLUTCH PEDAL
ALL SOLD SEPARATELY

76/78 SERIES MASTER CYLINDERS SHOWN HERE ARE FOR ILLUSTRATION PURPOSES ONLY AND ARE NOT INCLUDED WITH PEDAL ASSEMBLY

NOTES:

1. DIMENSIONS AND TOLERANCES PER ASME Y14.5 - 2009
2. UNLESS OTHERWISE SPECIFIED, ALL DIMENSIONS ARE IN INCHES.
3. DIMENSIONS ARE NOMINAL.

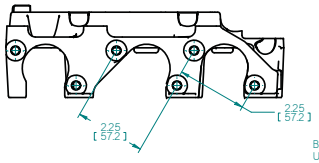

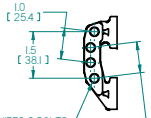

BRACKET CONNECTION REQUIRES 2 BOLTS. USE WIDEST SPREAD AVAILABLE PER PAD ANGLE DESIRED. 1.0" BOLT SPREAD MINIMUM

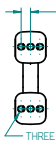

THREE SETS OF TAPPED HOLES IN PAD MOUNT ALLOW FOR SIDE-TO-SIDE ADJUSTMENT OF .30" EACH WAY

TILTON ENGINEERING, INC. (805) 688-2353 FAX (805) 688-2745
25 EASY STREET P.O. BOX 1787 BUELLTON, CALIFORNIA 93427 USA

TITLE: PEDAL ASSEMBLY, UNDERFOOT, 2 PEDAL, PIVOT TYPE BRAKE MASTERS BRAKE AND CLUTCH PEDALS

DRN BY LUND	CHK'D WAHL	SCALE 1 : 2	DWG 6524	REV NC
P/N 72-817	DATE 10/13/2015	SHEET 1 OF 1		

TILTON ENGINEERING®

"This document contains proprietary information of TILTON ENGINEERING, INC., and its receipt or possession does not convey the rights to reproduce, disclose its contents, or to manufacture, use or sell anything it may describe. Reproduction, disclosure, or use without specific written authorization of TILTON ENGINEERING, INC. is strictly forbidden."